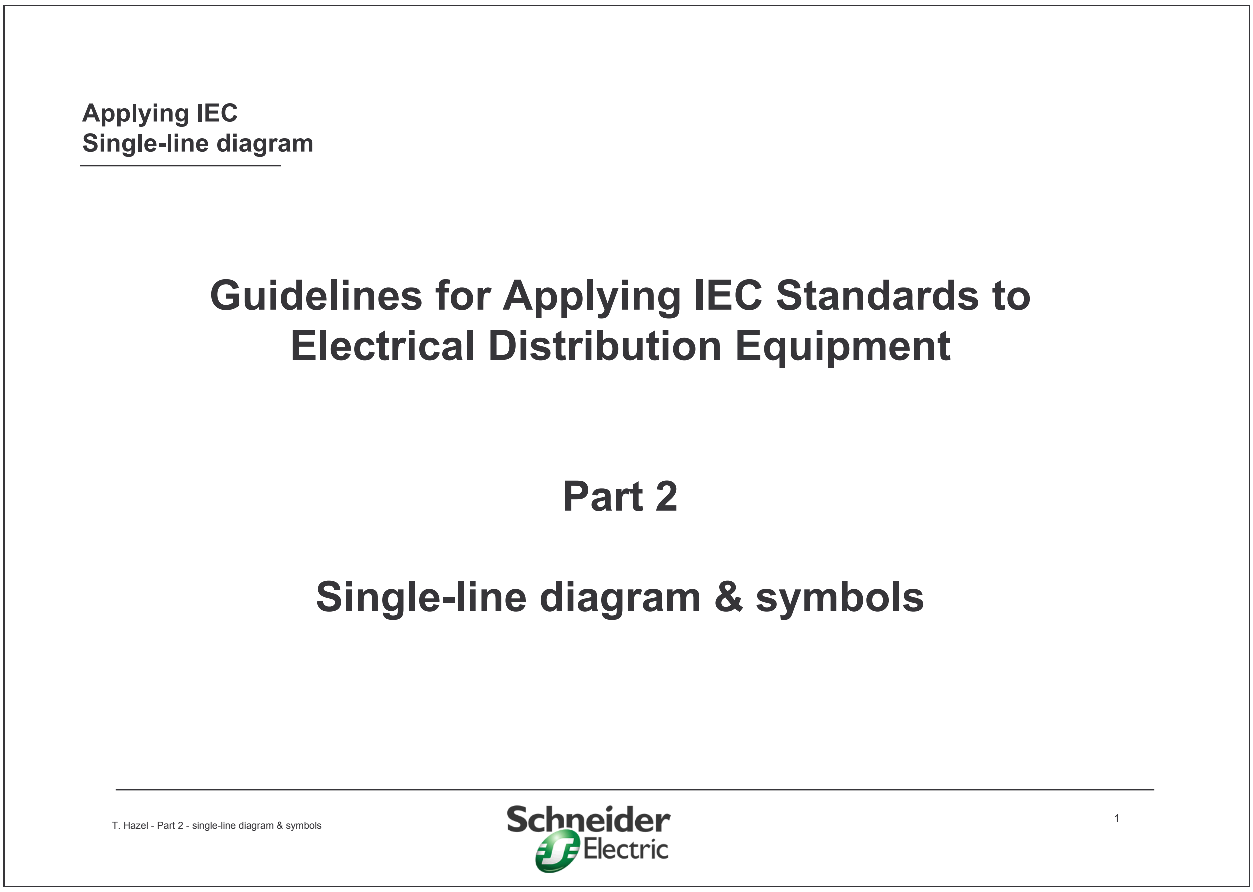

Guidelines for Applying IEC Standards to Electrical Distribution Equipment

Part 2

Single-line diagram & symbols

why the single-line diagram?

The single-line diagram is probably the most important document related to the electrical distribution system. It is therefore necessary that the information it conveys is correctly understood by all engineers using it. This part of the tutorial first takes a look at IEC symbols and then examines a typical single-line diagram of an industrial plant. Many of the concepts which will be dealt with in more detail in subsequent parts of the tutorial are introduced.

Why the single-line diagram

Most important document for electrical distribution system

Good introduction to IEC symbols

Introduces several points discussed later

general description of the single-line diagram

The example shows a plant supplied by 2 incoming lines at 110kV, each having a short-circuit power of 4000 MVA. Power transformers supply the main 33kV switchboard which distributes power to all the substations in the plant. Each substation has a 6.6kV switchboard for large motors and for supplying the distribution transformers for the low-voltage system.

The 110kV and low-voltage systems are directly earthed whereas both medium-voltage systems are connected to earth via resistors, the 33kV system using earthing transformers and the 6.6kV system using the step-down transformer neutral points.

At all voltage levels the bus-tie circuit-breakers are normally open. On loss of supply, automatic transfer systems switch the loads to the healthy supply. All power transformers have forced cooling to be able to supply the additional loads during emergency conditions.

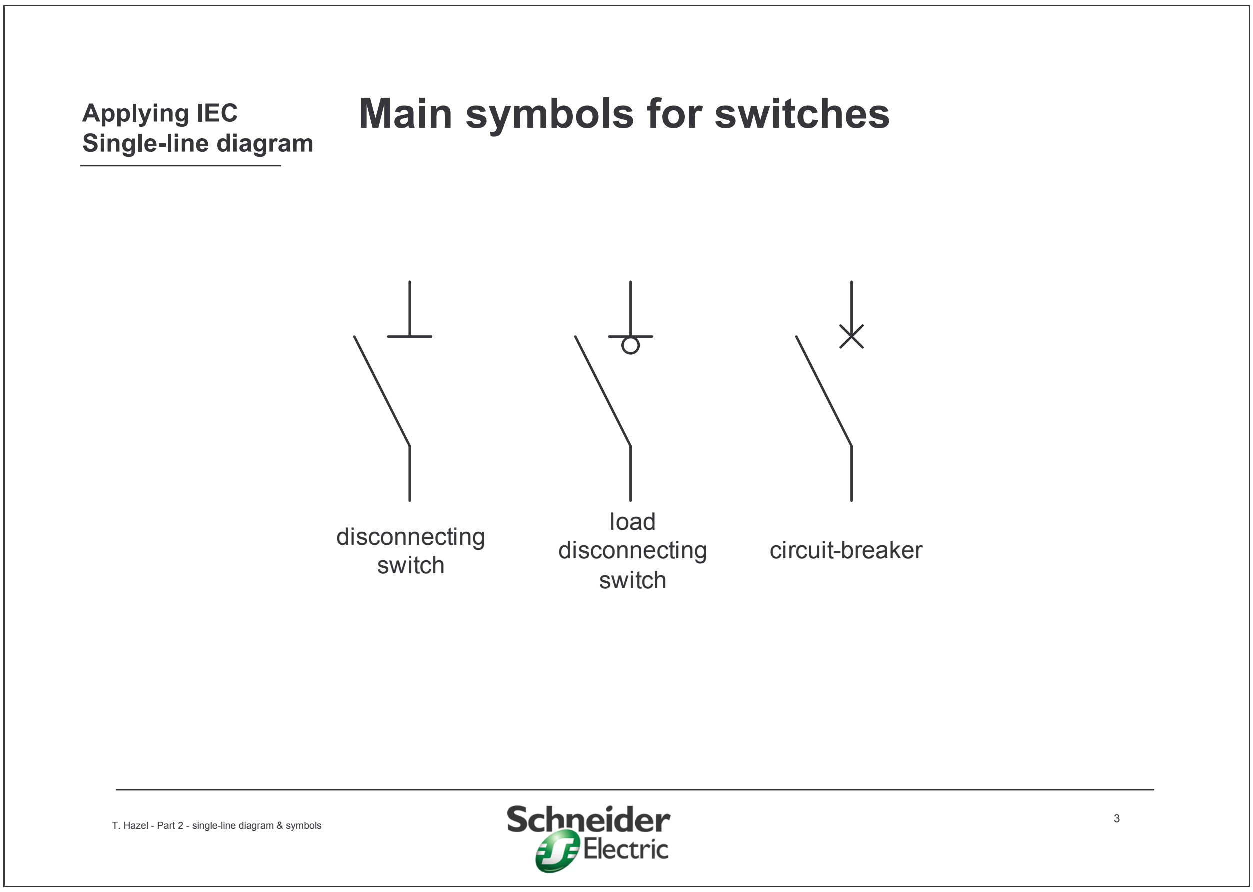

Applying IEC
Single-line diagram

Main symbols for switches

disconnecting switch

load disconnecting switch

circuit-breaker

IEC symbols

The IEC has several standards defining symbols. The standard *IEC60617 graphical symbols for diagrams* which replaces IEC117 contains several parts, each one dedicated to particular families of symbols. Part 1 provides some general information and includes an index to help find the symbol of any device. This list also contains the letter code of each device which is used in circuit diagrams.

Part 7 contains the symbols for switches. The 3 main switches found in single-line diagrams are shown below. Although the symbol for a circuit-breaker is generally easy to remember, the disconnecting switch (disconnector) and load interrupter switch (switch-disconnector) often get confused. All 3 devices have a letter code of Q.

switchgear and MCCs

The IEC standards use the general term *switchgear* for switchboards used for power distribution, and *controlgear* for switchboards supplying consumers. This is valid for both medium and low voltage. The single-line diagram shows switchgear and controlgear combined in the same 6.6kV board. In the low-voltage part controlgear (MCC) is used to supply most motors. The choice of separating switchgear and controlgear is based on project requirements alone. IEC standards do not address this issue.

Symbols are not unique

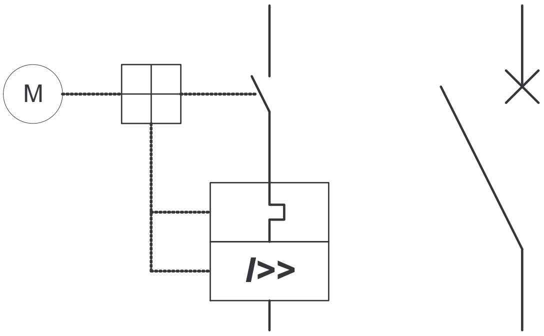

Both symbols can be used
for circuit-breakers

remarks about IEC symbols

No distinction is made between light and heavy current applications which means that the symbol used for a circuit-breaker could stand for a low-voltage miniature circuit-breaker of a few amperes or a high-voltage circuit-breaker of several thousand amperes.

IEC symbols are not always unique. It is possible to represent the same device in different ways. For example a motor-operated circuit-breaker is sometimes shown as follows. In this representation the overload and short-circuit trip units are shown actuating a trip-free motor-operated mechanism.

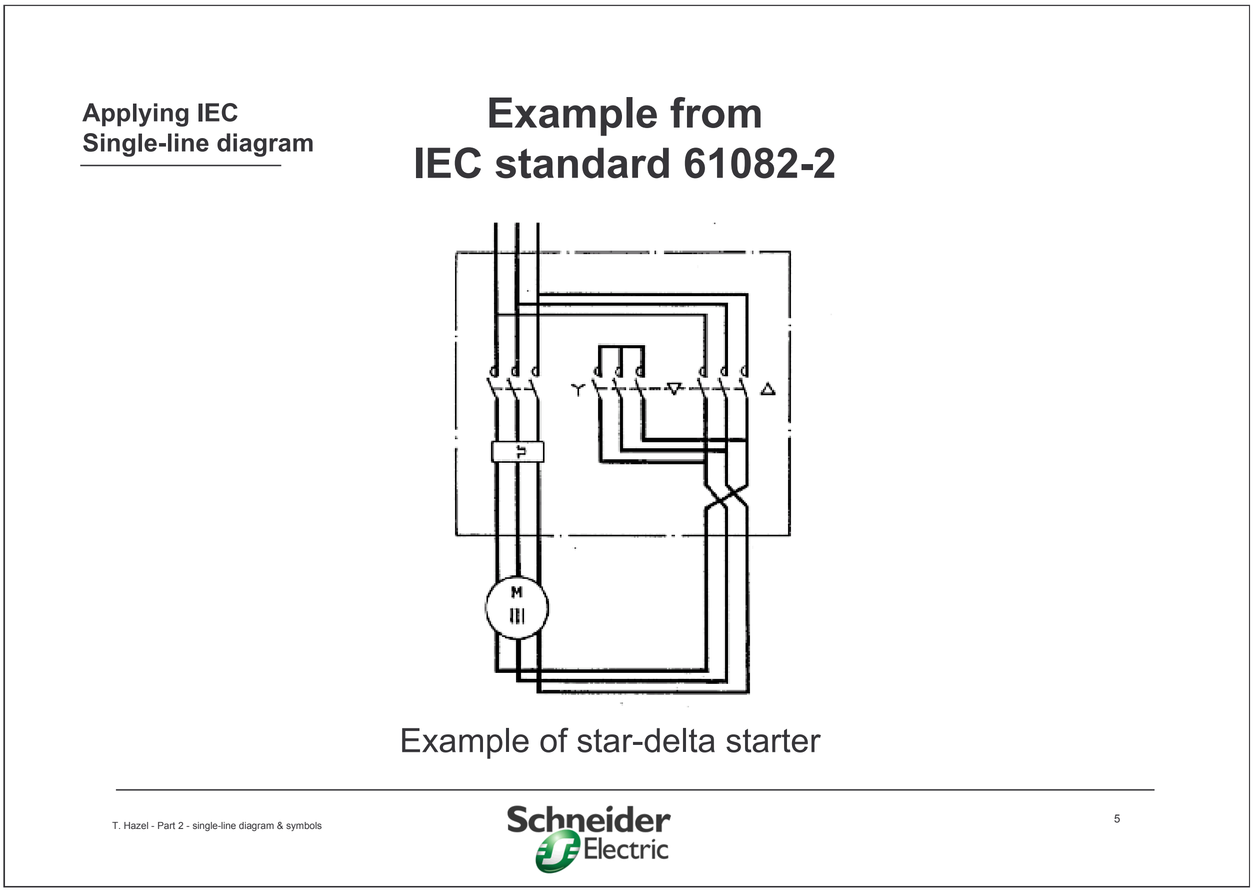

Applying IEC
Single-line diagram

Example from IEC standard 61082-2

Example of star-delta starter

Standards are very helpful in formalizing existing terminology and practices thereby providing a solid base for common understanding and further work. *IEC60113 diagrams, charts, tables* gives more detailed guidance on the use of graphical symbols in various types of drawings. The names given to the symbols correspond to those used in the IEV (International Electrotechnical Vocabulary) mentioned in part 1 of the tutorial. This should help the translators of electrical documentation although confusion may still persist due to the differences between American and British English.

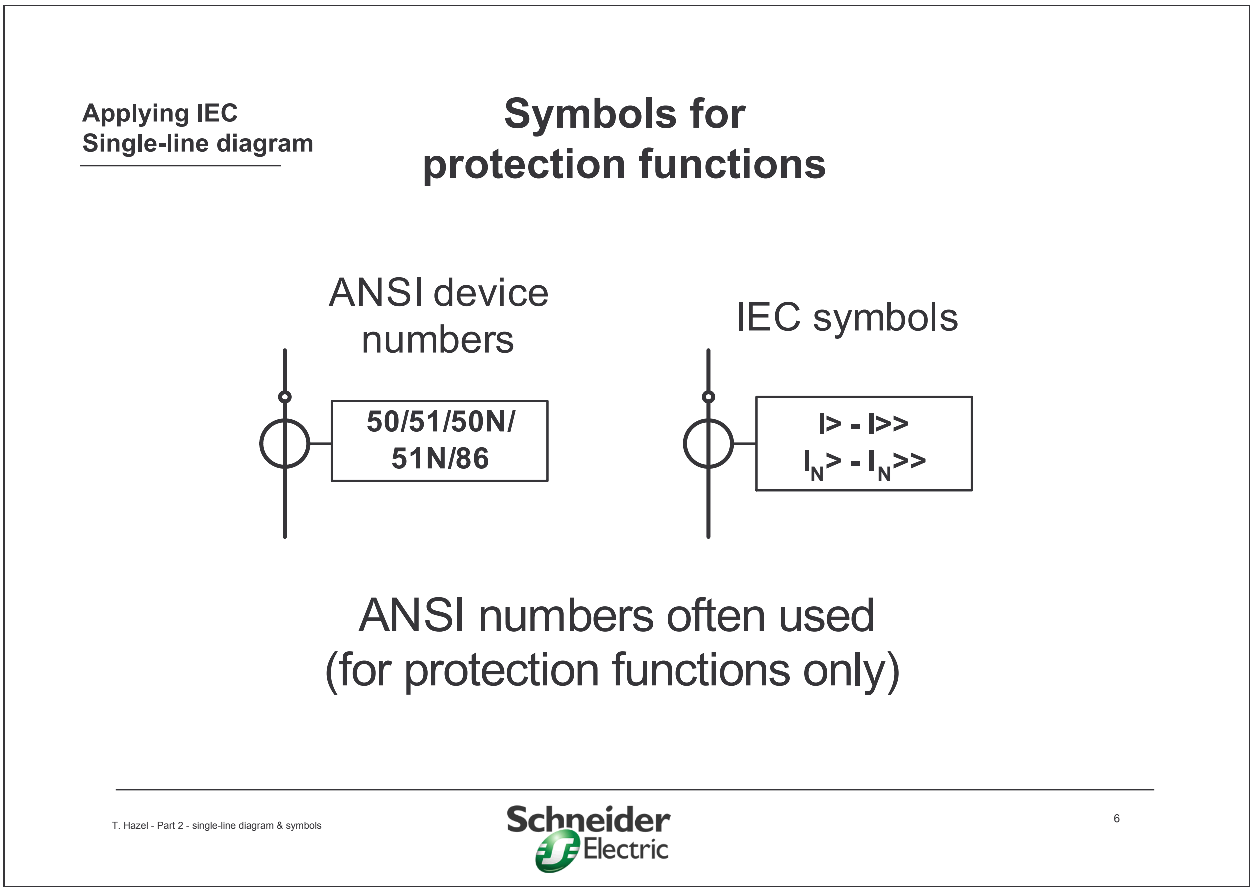

Applying IEC
Single-line diagram

Symbols for protection functions

ANSI device numbers

50/51/50N/
51N/86

IEC symbols

$I> - I>>$
$I_N> - I_N>>$

ANSI numbers often used
(for protection functions only)

symbols for protection functions

In some cases the terminology defined in the standards is not widely employed since it is less suitable than other terminology used elsewhere. A good example of this is the widespread use of the ANSI device numbers for defining protection functions on drawings otherwise using IEC symbols. The protection functions are more often than not defined with ANSI device numbers such as 49 for thermal image, 67 for reverse over-current, 87 for differential protection, etc. even though IEC60617 part 7 defines symbols for these functions.

To illustrate this one half of the attached single-line diagram uses IEC symbols for protection functions and the other half uses the ANSI device numbers as shown below. ANSI device numbers for other equipment such as circuit-breakers or disconnecting switches are not used. Although the protection functions themselves may be defined with ANSI device numbers, the letter code for any protection relay is always F.

The list of symbols on the attached single-line diagram shows both IEC symbols and ANSI device numbers for the protection functions.

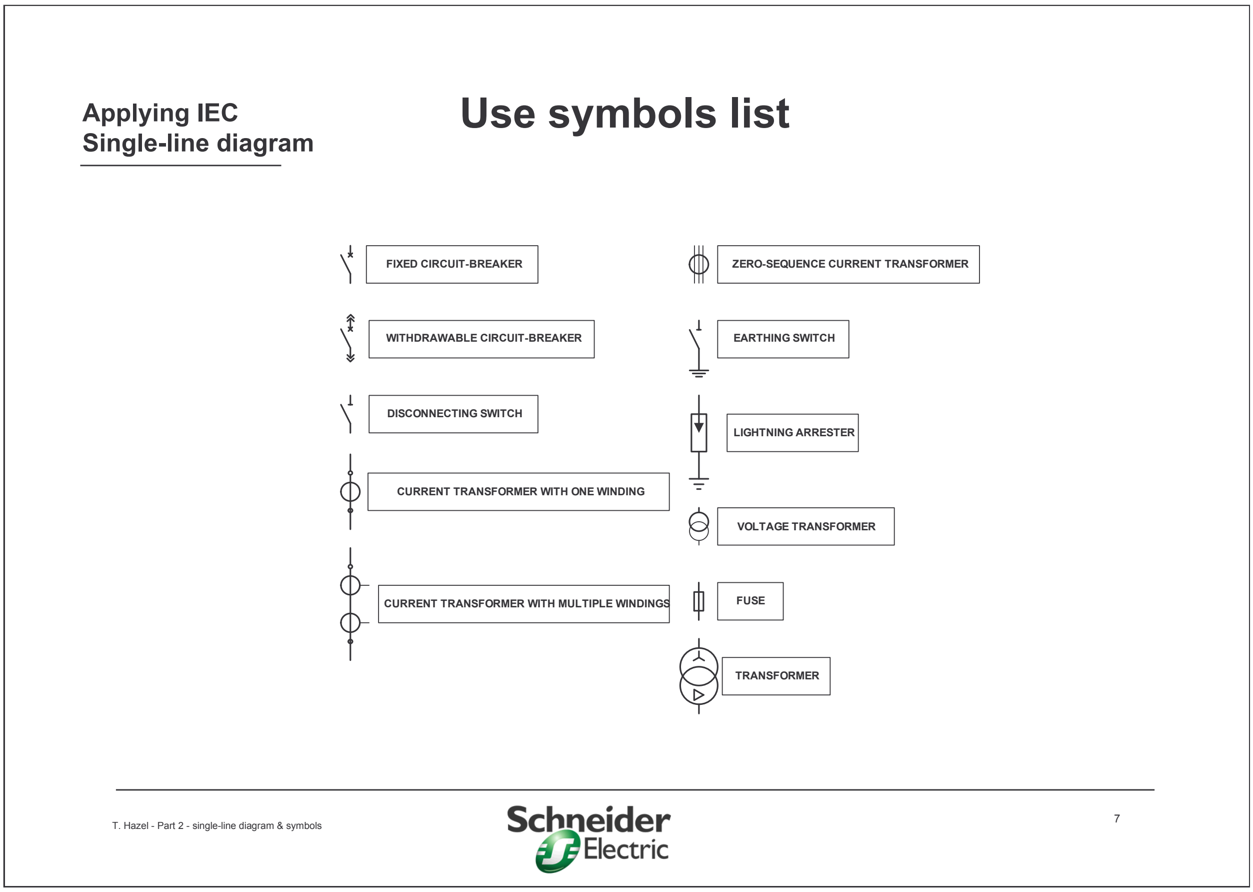

Applying IEC
Single-line diagram

Use symbols list

- FIXED CIRCUIT-BREAKER
- WITHDRAWABLE CIRCUIT-BREAKER
- DISCONNECTING SWITCH
- CURRENT TRANSFORMER WITH ONE WINDING
- CURRENT TRANSFORMER WITH MULTIPLE WINDINGS
- ZERO-SEQUENCE CURRENT TRANSFORMER
- EARTHING SWITCH
- LIGHTNING ARRESTER
- VOLTAGE TRANSFORMER
- FUSE
- TRANSFORMER

recommendations regarding symbols

It is strongly recommended that each application have a document defining all the symbols used. This is due to the possible use of ANSI device numbers which are not familiar to all engineers who work with IEC standards, and to avoid using different symbols for the same device. It also helps engineers who are familiar with IEC symbols to remember what they mean! A couple of examples of symbols as defined in IEC 60617 are included at the end of this section.

The standard IEC letter codes should be used for all devices. Engineers and maintenance people are familiar with these and use of different codes would be confusing and could be dangerous.

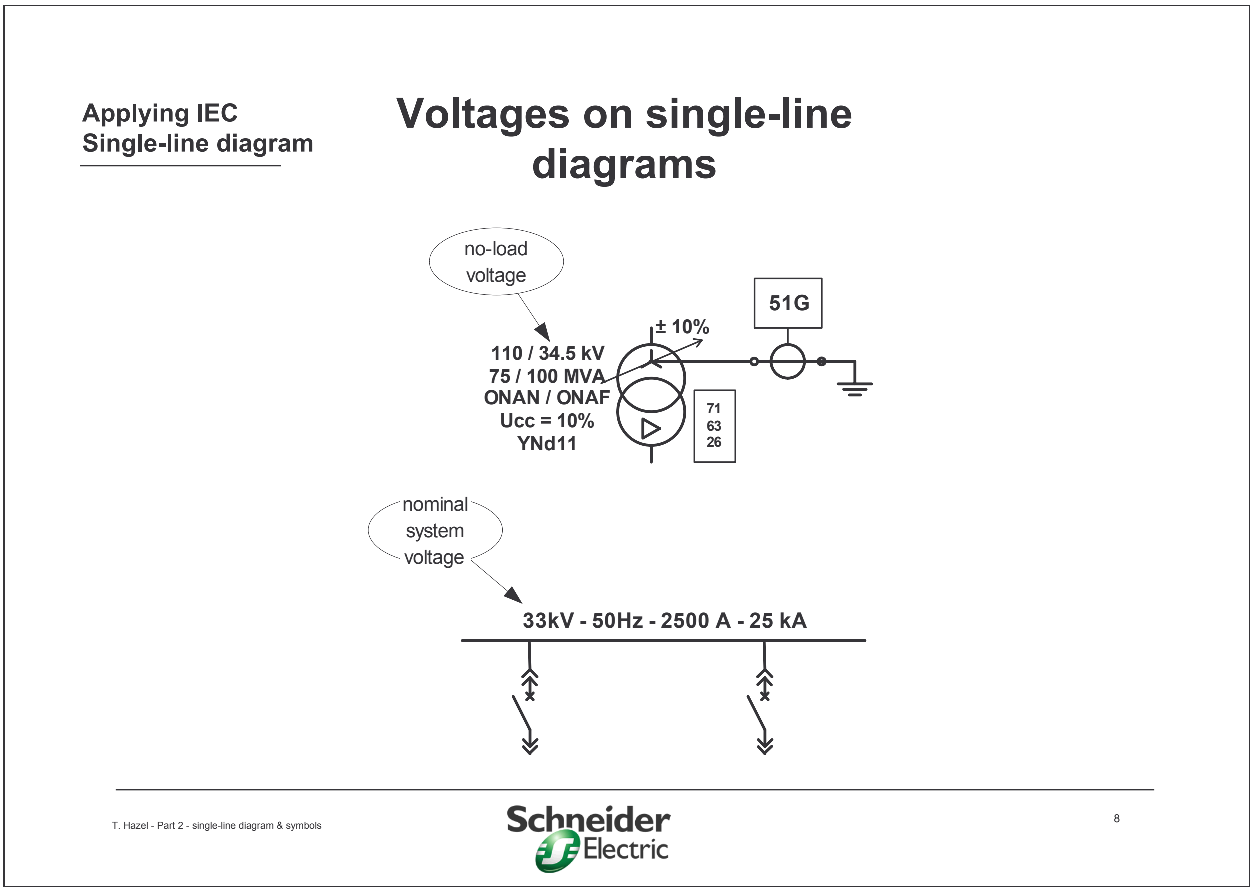

Applying IEC
Single-line diagram

Voltages on single-line diagrams

no-load voltage
110 / 34.5 kV
75 / 100 MVA
ONAN / ONAF
Ucc = 10%
YNd11
± 10%
51G
71
63
26
nominal system voltage
33kV - 50Hz - 2500 A - 25 kA

Schneider Electric

voltages used in the single-line diagram

Several voltages are used on the single-line diagram. Line-to-line voltages are always used on single-line diagrams. It is common practice to use the letter U to designate line-to-line voltages and the letter V to designate line-to-neutral voltages.

nominal system voltage on busbars

This is the voltage by which the system is designated, for example 6.6kV and 230/400V. The voltage will of course be not be exactly the same at different points in the system due to voltage drops in conductors. It will be higher than the nominal system voltage at the source busbar, and less than the nominal system voltage at intermediate busbars and at loads. The value shown on the single-line diagram will however be the same at all locations. For example 230/400V will be shown on the busbar of the switchgear, on the busbar of the controlgear (MCC), and on the low-voltage motor nameplates.

rated primary and secondary voltages of voltage transformers

The rated primary voltage is numerically the same as the nominal system voltage of the busbar to which the voltage transformer is connected (see part 5 of the tutorial) even though on switchgear the voltage may actually be a bit higher. Primary or secondary voltages are divided by √3 when the winding is connected between line and neutral.

rated voltages of transformer windings

The voltages are the no-load voltages appearing after applying the rated voltage to the primary winding (see part 4 of the tutorial). The rated voltage of the primary winding is numerically the same as the nominal system voltage of the busbar to which it is connected. Generally the no-load voltages of the other windings are 5% higher than the nominal system voltage on the busbars to which they are connected in order to compensate for the voltage drop in the transformer windings.

The secondary voltage 34.5kV shown above is suitable for the 33kV distribution system. In part 4 of the tutorial the meaning of the other information given will be discussed.

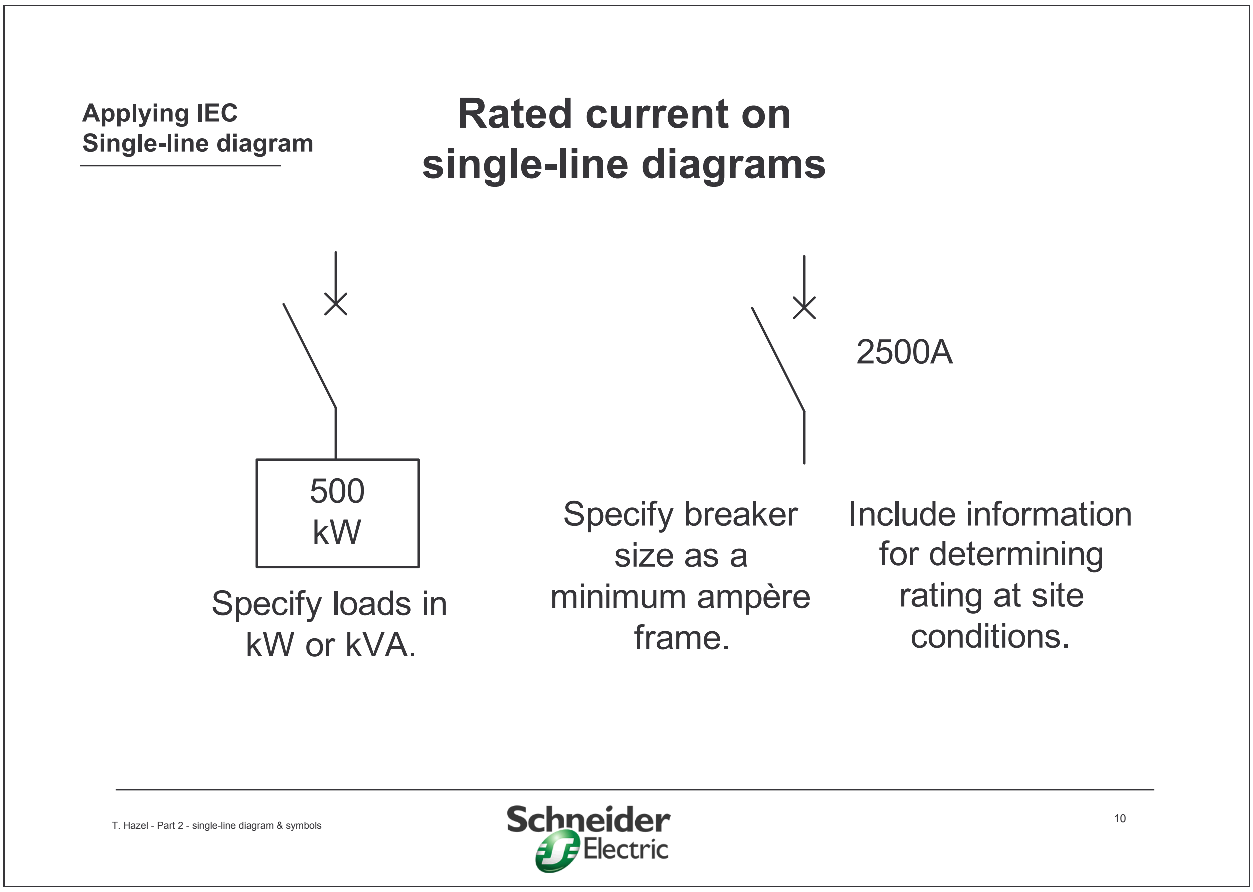

Applying IEC
Single-line diagram

Rated current on single-line diagrams

Specify loads in kW or kVA.

Specify breaker size as a minimum ampère frame.

Include information for determining rating at site conditions.

rated current on single-line diagrams

The meaning of the values of rated current which are shown on single-line diagrams is often not clear. The rated current of switches is based on the test specification defined in the applicable IEC standard and is not necessarily the same as the current that the switch can handle when installed at site in the switchboard. Derating due to installation in a switchboard will vary among manufacturers and will also be influenced by the site conditions of the application.

The best procedure is to indicate the ampere frame of the main switches and the power of the loads. A note on the single-line diagram should be added to state that the ampere-frame is given for information only, or as a minimum requirement, and that the equipment shall be capable of supplying the rated power at site conditions.

In part 4 the overload capacity of transformers will be discussed. The definition of the rated current on the single-line diagram should take this into account.

what should be found on a single-line diagram?

The information found on a single-line diagram will vary during engineering. At the beginning, in addition to the main components it may be sufficient to show only frequency, voltage levels on each busbar, short-circuit power of the incoming supply, transformer rated power and impedance, generator rated power, and particularly large loads. This information together with a plant layout drawing is sufficient to determine approximate values of short-circuit current, switchgear ratings, and whether problems could be encountered supplying loads or starting large motors.

After engineering has been completed the following additional detailed information will normally be found on the single-line diagram.

☐ type of switches (circuit-breakers, load switches, fixed-mounted or withdrawable)

☐ number of poles for low-voltage circuit-breakers

☐ transformer power for each cooling method

☐ transformer vector group, phase displacement, and tapping range and type

☐ overvoltage protection devices such as lightning arrestors

☐ rated current of busbars and switches

☐ rated short-circuit current withstand and duration on busbars

☐ rated frequency on busbars

☐ loads and their rated power

☐ type of connections and sizes (cable, busduct, overhead line)

☐ primary and secondary rated voltage of voltage transformers and class

☐ primary and secondary rated currents of current transformers and class

☐ protection functions

☐ neutral earthing method for each voltage level

☐ normal status of main switches (normally open or normally closed)

The attached single-line diagram is at an intermediary stage between the initial and the final conceptual design.

Example of a list of symbols for an IEC project

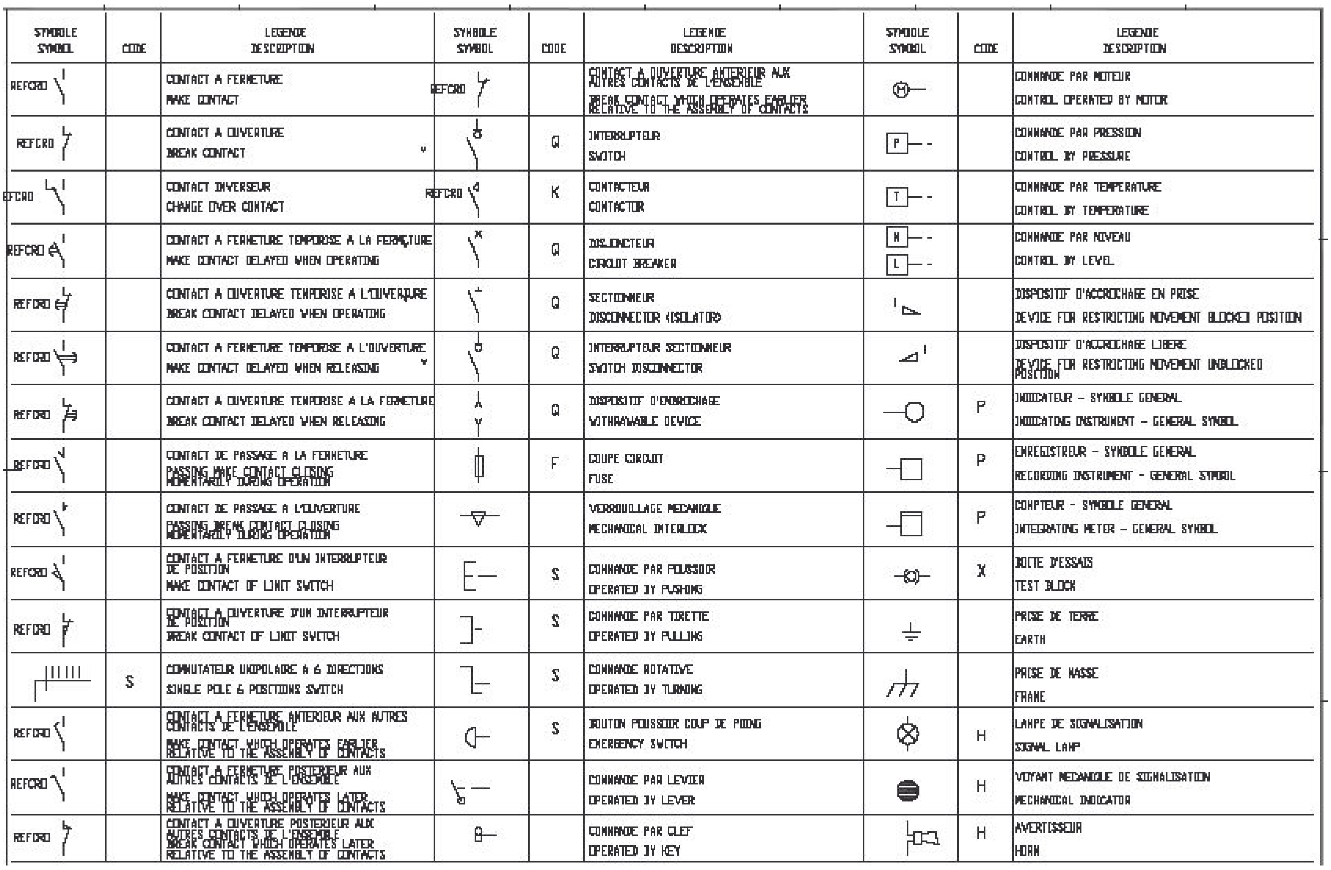

SYMBOLE SYMBOL	CODE	LEGENDE DESCRIPTION	SYMBOLE SYMBOL	CODE	LEGENDE DESCRIPTION	SYMBOLE SYMBOL	CODE	LEGENDE DESCRIPTION
REFCRO		CONTACT A FERMETURE MAKE CONTACT	REFCRO		CONTACT A OUVERTURE ANTERIEUR AUX AUTRES CONTACTS DE L'ENSEMBLE BREAK CONTACT WHICH OPERATES EARLIER RELATIVE TO THE ASSEMBLY OF CONTACTS			COMMANDE PAR MOTEUR CONTROL OPERATED BY MOTOR
REFCRO		CONTACT A OUVERTURE BREAK CONTACT		Q	INTERRUPTEUR SWITCH			COMMANDE PAR PRESSION CONTROL BY PRESSURE
REFCRO		CONTACT INVERSEUR CHANGE OVER CONTACT	REFCRO	K	CONTACTEUR CONTACTOR			COMMANDE PAR TEMPERATURE CONTROL BY TEMPERATURE
REFCRO		CONTACT A FERMETURE TEMPORISE A LA FERMETURE MAKE CONTACT DELAYED WHEN OPERATING		Q	DISJONCTEUR CIRCUIT BREAKER			COMMANDE PAR NIVEAU CONTROL BY LEVEL
REFCRO		CONTACT A OUVERTURE TEMPORISE A L'OUVERTURE BREAK CONTACT DELAYED WHEN OPERATING		Q	SECTIONNEUR DISCONNECTOR (ISOLATOR)			DISPOSITIF D'ACCROCHAGE EN PRISE DEVICE FOR RESTRICTING MOVEMENT BLOCKED POSITION
REFCRO		CONTACT A FERMETURE TEMPORISE A L'OUVERTURE MAKE CONTACT DELAYED WHEN RELEASING		Q	INTERRUPTEUR SECTIONNEUR SWITCH DISCONNECTOR			DISPOSITIF D'ACCROCHAGE LIBERE DEVICE FOR RESTRICTING MOVEMENT UNBLOCKED POSITION
REFCRO		CONTACT A OUVERTURE TEMPORISE A LA FERMETURE BREAK CONTACT DELAYED WHEN RELEASING		Q	DISPOSITIF D'EMBROCHAGE WITHDRAWABLE DEVICE		P	INDICATEUR - SYMBOLE GENERAL INDICATING INSTRUMENT - GENERAL SYMBOL
REFCRO		CONTACT DE PASSAGE A LA FERMETURE PASSING MAKE CONTACT CLOSING MOMENTARILY DURING OPERATION		F	COUPE CIRCUIT FUSE		P	ENREGISTREUR - SYMBOLE GENERAL RECORDING INSTRUMENT - GENERAL SYMBOL
REFCRO		CONTACT DE PASSAGE A L'OUVERTURE PASSING BREAK CONTACT CLOSING MOMENTARILY DURING OPERATION			VERROUILLAGE MECANIQUE MECHANICAL INTERLOCK		P	COMPTEUR - SYMBOLE GENERAL INTEGRATING METER - GENERAL SYMBOL
REFCRO		CONTACT A FERMETURE D'UN INTERRUPTEUR DE POSITION MAKE CONTACT OF LIMIT SWITCH		S	COMMANDE PAR POUSSOIR OPERATED BY PUSHING		X	BOITE D'ESSAIS TEST BLOCK
REFCRO		CONTACT A OUVERTURE D'UN INTERRUPTEUR DE POSITION BREAK CONTACT OF LIMIT SWITCH		S	COMMANDE PAR TIRETTE OPERATED BY PULLING			PRISE DE TERRE EARTH
	S	COMMUTATEUR UNIPOLAIRE A 6 DIRECTIONS SINGLE POLE 6 POSITIONS SWITCH		S	COMMANDE ROTATIVE OPERATED BY TURNING			PRISE DE MASSE FRAME
REFCRO		CONTACT A FERMETURE ANTERIEUR AUX AUTRES CONTACTS DE L'ENSEMBLE MAKE CONTACT WHICH OPERATES EARLIER RELATIVE TO THE ASSEMBLY OF CONTACTS		S	BOUTON POUSSOIR COUP DE POING EMERGENCY SWITCH		H	LAMPE DE SIGNALISATION SIGNAL LAMP
REFCRO		CONTACT A FERMETURE POSTERIEUR AUX AUTRES CONTACTS DE L'ENSEMBLE MAKE CONTACT WHICH OPERATES LATER RELATIVE TO THE ASSEMBLY OF CONTACTS			COMMANDE PAR LEVIER OPERATED BY LEVER		H	VOYANT MECANIQUE DE SIGNALISATION MECHANICAL INDICATOR
REFCRO		CONTACT A OUVERTURE POSTERIEUR AUX AUTRES CONTACTS DE L'ENSEMBLE BREAK CONTACT WHICH OPERATES LATER RELATIVE TO THE ASSEMBLY OF CONTACTS			COMMANDE PAR CLEF OPERATED BY KEY		H	AVERTISSEUR HORN

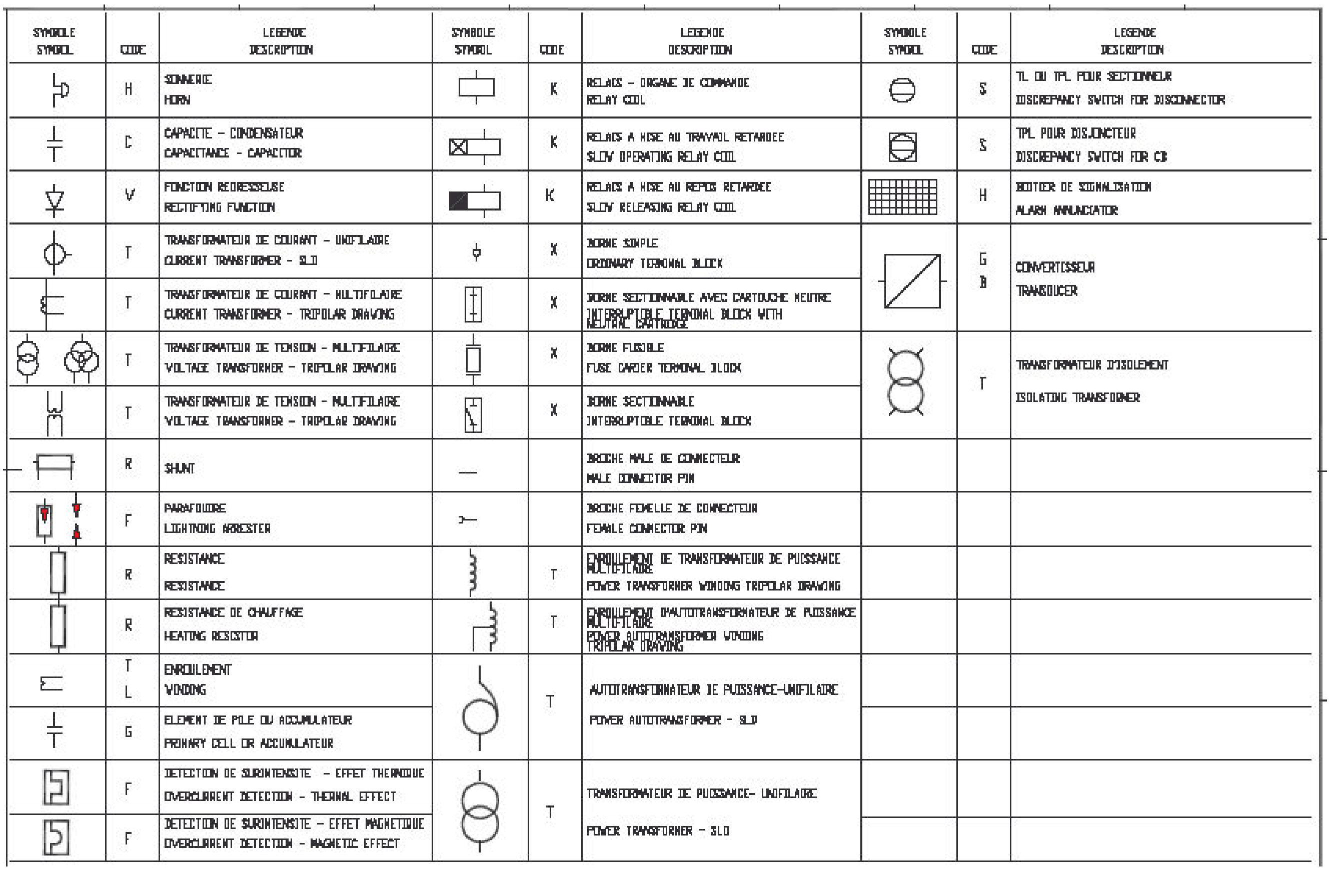

SYMBOLE SYMBOL	CODE	LEGENDE DESCRIPTION	SYMBOLE SYMBOL	CODE	LEGENDE DESCRIPTION	SYMBOLE SYMBOL	CODE	LEGENDE DESCRIPTION
	H	SONNERIE HORN		K	RELAIS - ORGANE DE COMMANDE RELAY COIL		S	TL OU TPL POUR SECTIONNEUR DISCREPANCY SWITCH FOR DISCONNECTOR
	C	CAPACITE - CONDENSATEUR CAPACITANCE - CAPACITOR		K	RELAIS A MISE AU TRAVAIL RETARDEE SLOW OPERATING RELAY COIL		S	TPL POUR DISJONCTEUR DISCREPANCY SWITCH FOR CB
	V	FONCTION REDRESSEUSE RECTIFYING FUNCTION		K	RELAIS A MISE AU REPOS RETARDEE SLOW RELEASING RELAY COIL		H	BOITIER DE SIGNALISATION ALARM ANNUNCIATOR
	T	TRANSFORMATEUR DE COURANT - UNIFILAIRE CURRENT TRANSFORMER - SLD		X	BORNE SIMPLE ORDINARY TERMINAL BLOCK		G B	CONVERTISSEUR TRANSDUCER
	T	TRANSFORMATEUR DE COURANT - MULTIFILAIRE CURRENT TRANSFORMER - TRIPOLAR DRAWING		X	BORNE SECTIONNABLE AVEC CARTOUCHE NEUTRE INTERRUPTIBLE TERMINAL BLOCK WITH NEUTRAL CARTRIDGE			
	T	TRANSFORMATEUR DE TENSION - MULTIFILAIRE VOLTAGE TRANSFORMER - TRIPOLAR DRAWING		X	BORNE FUSIBLE FUSE CARDER TERMINAL BLOCK		T	TRANSFORMATEUR D'ISOLEMENT ISOLATING TRANSFORMER
	T	TRANSFORMATEUR DE TENSION - MULTIFILAIRE VOLTAGE TRANSFORMER - TRIPOLAR DRAWING		X	BORNE SECTIONNABLE INTERRUPTIBLE TERMINAL BLOCK			
	R	SHUNT			BROCHE MALE DE CONNECTEUR MALE CONNECTOR PIN			
	F	PARAFOUDRE LIGHTNING ARRESTER			BROCHE FEMELLE DE CONNECTEUR FEMALE CONNECTOR PIN			
	R	RESISTANCE RESISTANCE		T	ENROULEMENT DE TRANSFORMATEUR DE PUISSANCE MULTIFILAIRE POWER TRANSFORMER WINDING TRIPOLAR DRAWING			
	R	RESISTANCE DE CHAUFFAGE HEATING RESISTOR		T	ENROULEMENT D'AUTOTRANSFORMATEUR DE PUISSANCE MULTIFILAIRE POWER AUTOTRANSFORMER WINDING TRIPOLAR DRAWING			
	T L	ENROULEMENT WINDING		T	AUTOTRANSFORMATEUR DE PUISSANCE-UNIFILAIRE POWER AUTOTRANSFORMER - SLD			
	G	ELEMENT DE PILE OU ACCUMULATEUR PRIMARY CELL OR ACCUMULATEUR						
	F	DETECTION DE SURINTENSITE - EFFET THERMIQUE OVERCURRENT DETECTION - THERMAL EFFECT		T	TRANSFORMATEUR DE PUISSANCE- UNIFILAIRE POWER TRANSFORMER - SLD			
	F	DETECTION DE SURINTENSITE - EFFET MAGNETIQUE OVERCURRENT DETECTION - MAGNETIC EFFECT						